ION CEILING
Emergency Exit Sign Ceiling Mounted

Class 1 | IP 20 | PHILIP PAYNE

FEATURES

Control Gear	Operation	Supply voltage	Maximum luminaires on a Type B, 10A circuit breaker	Product Codes
Emergency	Maintained/ Non-maintained - 3 hour	220-240V AC 50/60Hz	90 Luminaires	IONCSLM IONCRLM
DALI Emergency	Maintained/ Non-maintained - 3 hour	220-240V AC 50/60Hz	90 Luminaires	IONCSDL IONCRDL
SPECTO-XT Emergency	Maintained/ Non-maintained - 3 hour	220-240V AC 50/60Hz	90 Luminaires	IONCSXT IONCRXT
Central Supply	Dependant on Central Battery System	220-240V AC 50/60Hz 176-264V DC	30 Luminaires	IONCSLA IONCRLA
Central Supply DALI	Dependant on Central Battery System	220-240V AC 50/60Hz 176-280V DC	30 Luminaires	IONCSDA IONCRDA

Accessories (Ordered Separately)	
Ceiling Reinforcement Panel	IONCRP

WARNING



Do not stare at operating lamp. It may be harmful to the eyes.

EXIT SIGN DIMENSIONS

SURFACE



RECESSED

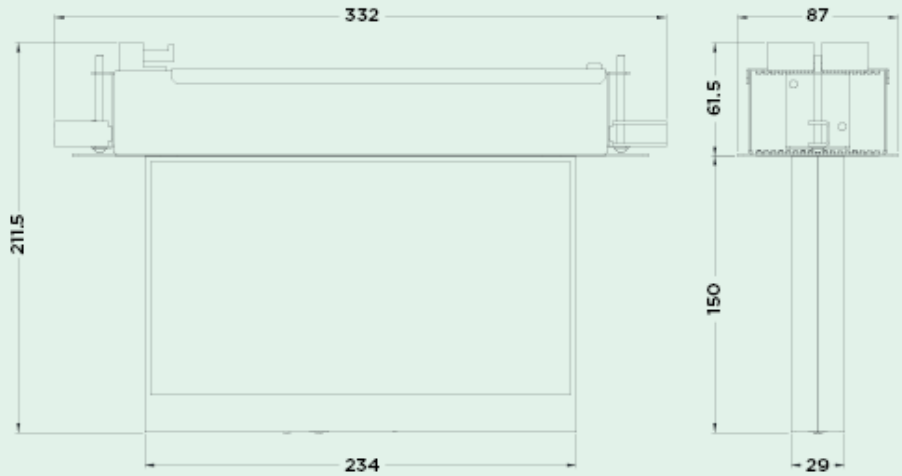

IMPORTANT-SAFETY

Before carrying out any servicing on this luminaire, ensure that the mains supply is fully isolated.
Disconnect luminaire before insulation testing of the installation.

SUPPLY CONNECTIONS

DALI /CENTRAL SUPPLY DALI

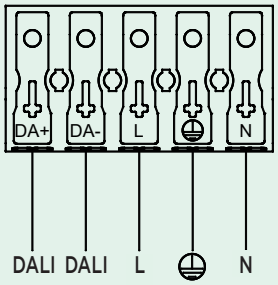

CENTRAL SUPPLY, EMERGENCY AND SPECTO XT

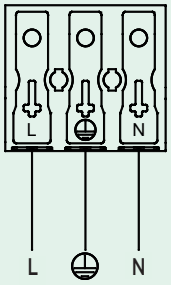

BASIC INSULATION IS MAINTAINED BETWEEN THE LV SUPPLY AND CONTROL CONDUCTORS ON THIS LUMINAIRE.

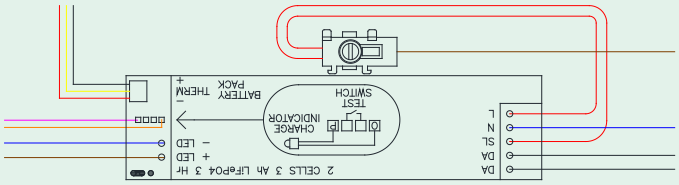

MAINTAINED OPERATION - SUPPLIED AS STANDARD

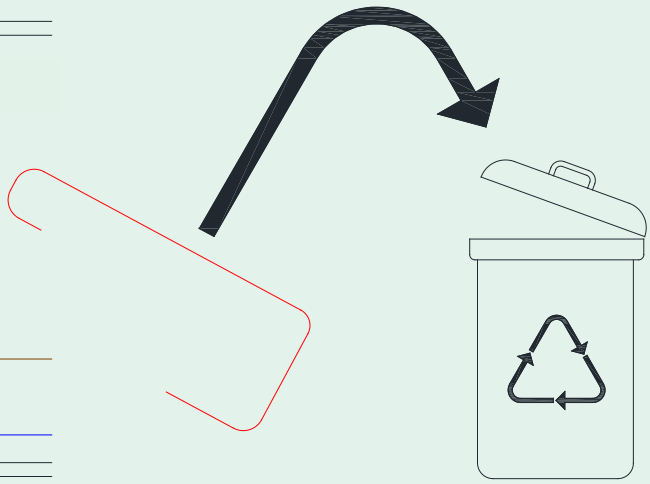

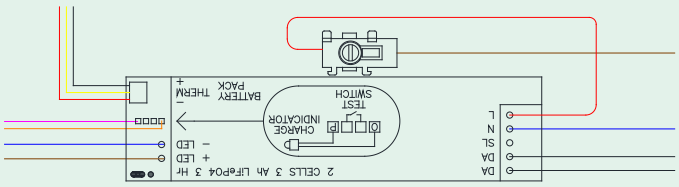

NON-MAINTAINED OPERATION - REMOVE SL (SWITCHED LIVE) WIRE

RECESSED INSTALLATION METHOD

1.

NOTE:
FOR FIBRE CEILING TILES, A PATTRESS SUPPORT PLATE MUST BE USED.
PART NUMBER: IONCRP
595 X 200 X 6MM

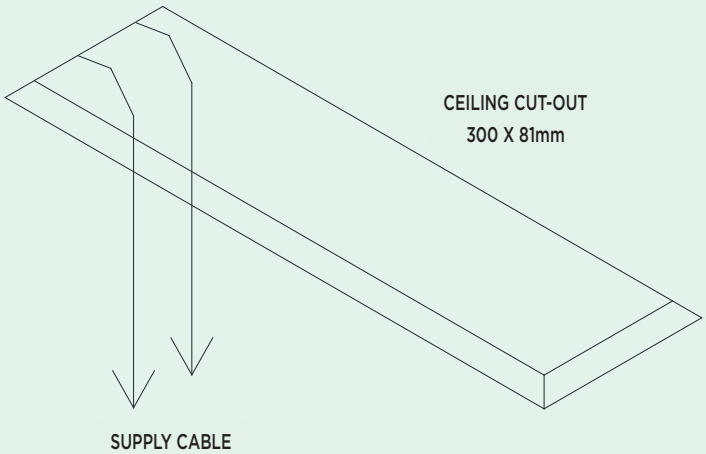

SURFACE INSTALLATION METHOD

1.

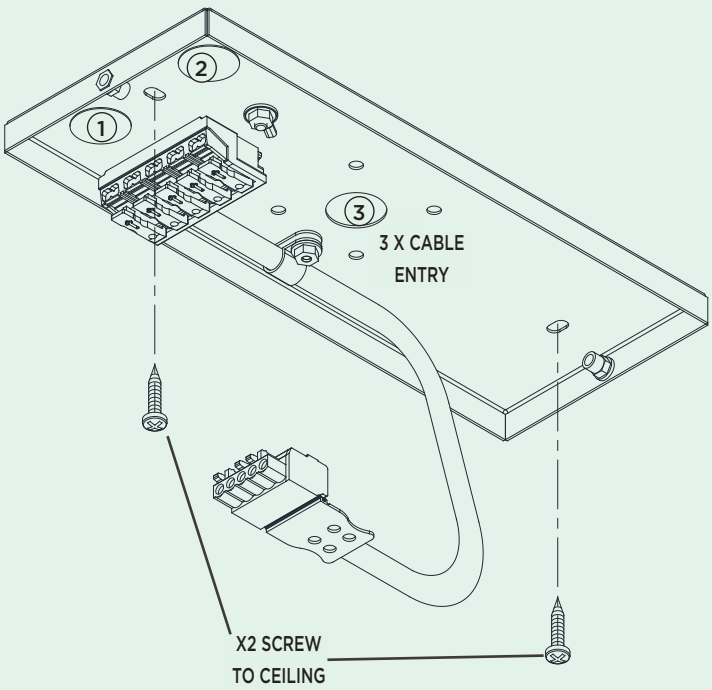

RECESSED INSTALLATION METHOD

2.

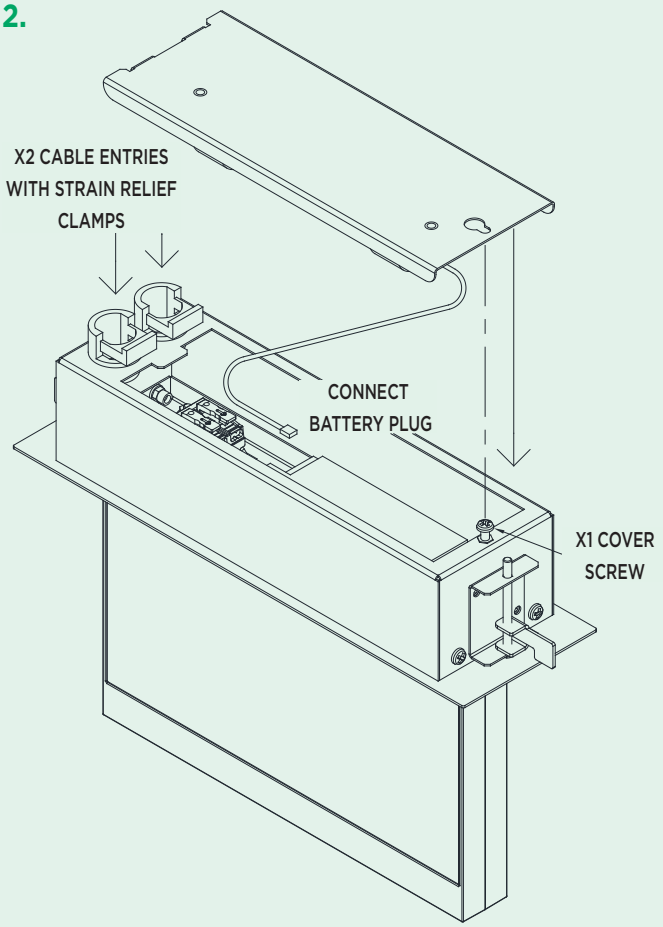

3.

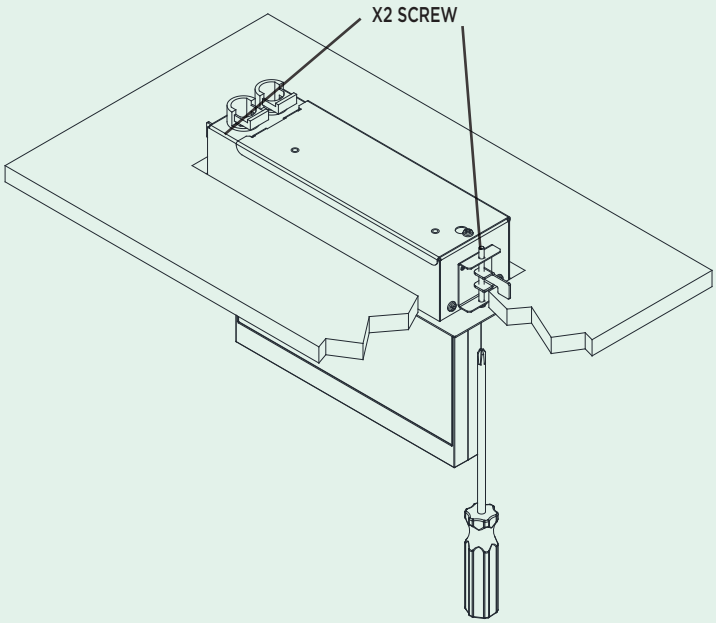

SURFACE INSTALLATION METHOD

2.

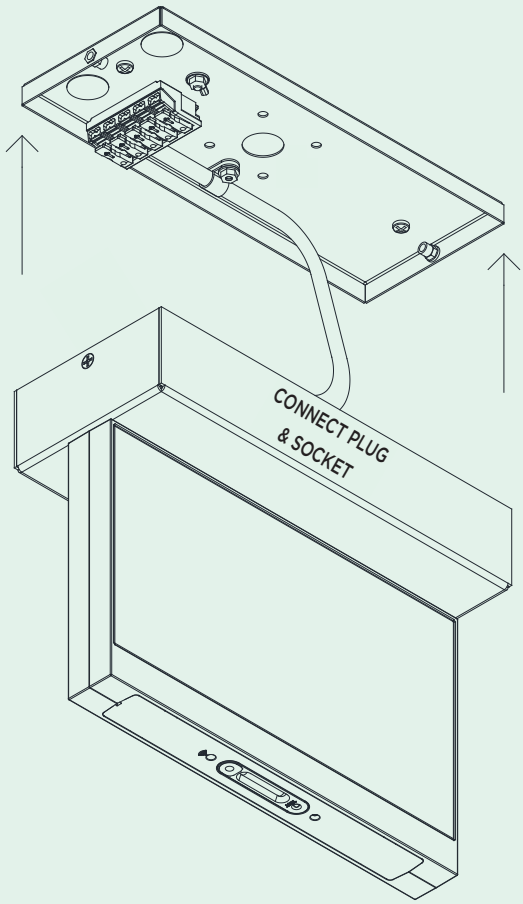

3.

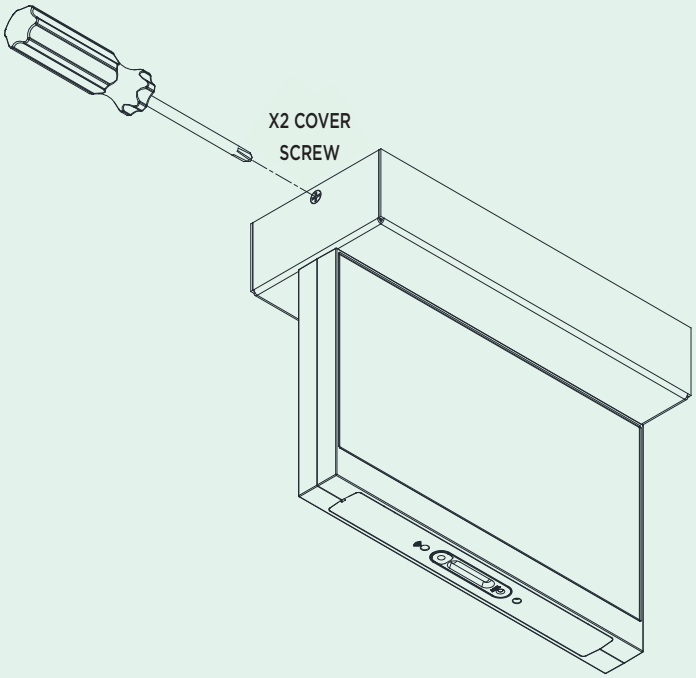

LED STATUS INDICATION

Operation	Led Status
Normal mode	Green LED- ON
Commissioning	Green LED- ON
Function test	Green LED- Fast Flash
Duration test	Green LED- Slow flash
Lamp fault/open circuit/short circuit	Red LED - ON
Battery fault	Red LED - Slow flash
Charge fault/Circuit fault	Red LED - Fast flash
Emergency mode	LED OFF
Identification	Red/Green LED - Slow flash

FAULT RECTIFICATION SEQUENCE

1.Fault Identification	Slow Red Flash = Battery Fault	Permanent Red = Lamp Fault	Charge Fault
2. Take Remedial Action	Check Battery/ Replace Battery	Check Lamp/ Replace Lamp	Check Module/ Replace Module
3. Reset Unit/ Check Status	Switch Luminaire unswitched mains off / on For Specto-XT use the Specto-XT Programmer to check status of luminaire.		
4. Automatic Reset	Philip Payne AutoTest automatically resets the module to confirm rectification of fault. The device then reverts to standby mode if the fault has been cleared or returns to fault indication if fault persists. For Specto-XT use the Specto-XT Programmer to initiate function/duration test. The luminaire will pend the test until the battery is sufficiently charged. The test status can be retrieved using the Specto-XT Programmer (please leave at least 60 seconds between test initiation and reading status).		

IMPORTANT

To prevent lamp damage and false triggering of fault status please note the following :-

-Ensure LED's are connected correctly to the luminaire prior to applying power.

-Do not interrupt unswitched supply during self-commissioning period.

-Please allow 51 hours for charge, discharge, charge cycle.

IMPORTANT SPECTO-XT INFORMATION

SPECTO-XT LUMINAIRES ARE SUPPLIED WITH RADIO (RF) COMMUNICATIONS DISABLED (AN AMBER LED WILL BLINK ONCE EVERY EIGHT SECONDS WHEN RF IS INHIBITED). SPECTO-XT LUMINAIRES MUST BE COMMISSIONED BY APPROPRIATELY TRAINED PERSONNEL. PLEASE CONTACT PHILIP PAYNE TECHNICAL +44 (0)121 7052384 FOR MORE DETAIL.

GENERAL

-SPECTO-XT ADDS WIRELESS COMMUNICATION TO THE PHILIP PAYNE LIGHTING CONTROL SYSTEMS.

-SPECTO-XT USES 868MHZ WIRELESS MESH TECHNOLOGY TO PROVIDE UNRIVALLED WIRELESS PERFORMANCE (922MHZ AUSTRALASIA).

DEFAULT SETTINGS

EACH SPECTO-XT LUMINAIRE IS DELIVERED WITHOUT ITS ADDRESSES SET AND RADIO (RF) COMMUNICATIONS DISABLED.

-IT IS IMPORTANT TO SET ADDRESSES CORRECTLY

-RF TRANSMISSION MUST BE ENABLED FOR SPECTO-XT LUMINAIRES TO COMMUNICATE.

DEFAULT SETTINGS

INSTRUCTIONS

A MAINTAINED LUMINAIRE CAN BE SWITCHED IN THE USUAL WAY WHEN MAINS ARE HEALTHY. UPON MAINS FAILURE THE NOMINATED EMERGENCY LAMP WILL OPERATE AT A REDUCED BRILLIANCE, FOR A PERIOD OF 3 HOURS UNLESS NORMAL MAINS IS RESTORED.

A NON-MAINTAINED LUMINAIRE WILL ONLY OPERATE ON MAINS FAILURE AND THEREFORE NEEDS TO BE FED FROM THE LOCAL LIGHTING CIRCUIT.

THE POWER IS A SET OF RECHARGEABLE NICKEL-CADMIUM / NICKEL METAL HYDRIDE / LITHIUM IRON PHOSPHATE CELLS. ALL THE ELECTRONIC CIRCUITS EMPLOYED HAVE THE ADDED FACILITY OF DEEP DISCHARGE PROTECTION, WHICH WILL PREVENT POSSIBLE DAMGE TO CELLS CAUSED BY OVER DISCHARGE THE LUMINAIRE CONTAINS AN AUTOMATIC CHARGING UNIT AND BATTERIES SHOULD BE CHARGED FOR A MINIMUM OF 24 HOURS TO ACHIEVE THE SPECIFIED DISCHARGE PERIOD.

THIS TYPE OF LUMINAIRE IS GENERALLY RESTRICTED TO AN AMBIENT TEMPERATURE RANGE BETWEEN 0°C AND 25°C. MAINS VOLTAGE TOLERANCE IS ±6%.

IMPORTANT

TO PREVENT FALSE TRIGGERING OF FAULT STATUS PLEASE NOTE THE FOLLOWING:-

- ENSURE THE LIGHT SOURCE IS FITTED CORRECTLY TO THE LUMINAIRE PRIOR TO APPLYING POWER.
- DO NOT INTERRUPT UNSWITCHED SUPPLY DURING SELF COMMISSIONING PERIOD. PLEASE ALLOW 51 HOURS FOR CHARGE, DISCHARGE AND CHARGE CYCLE.

WHAT IS THE SPECTO-XT EMERGENCY SYSTEM

SPECTO-XT IS THE SAME AS ANY SELF-CONTAINED EMERGENCY LUMINAIRE BUT THE ELECTRONIC MODULE HAS AN INTEGRAL MICROPROCESSOR TO MONITOR AND AUTOMATICALLY TEST. THE NORMAL LED INDICATOR WILL SHOW WHEN FAULTS ARE FOUND. STATUS IS THEN WIRELESSLY TRANSMITTED THROUGH THE SPECTO-XT MESH NETWORK BACK TO THE SPECTO-XT GATEWAY.

PLEASE NOTE :

SPECTO-XT EMERGENCY LUMINAIRES MAY SELF-TEST AT ANY TIME. CONSEQUENTLY, CAUTION SHOULD BE EXERCISED IN SITUATIONS WHERE THIS MAY BE INCONVENIENT (SUCH AS HOTEL ROOMS OR HOSPITAL WARDS). SPECIFIC TESTING TIMES CAN BE SET VIA THE SPECTO-XT WEBSITE (SPECTO-XT GATEWAY REQUIRED).

Fitting Reference:	Installation Date:	Location:

MONTH	TEST	EXAMPLE	1ST YEAR	2ND YEAR	3RD YEAR	4TH YEAR	5TH YEAR	6TH YEAR	7TH YEAR	8TH YEAR
	1. Functional	PASSED								
	2. Functional	PASSED								
	3. Functional	PASSED								
	4. Functional	PASSED								
	5. Functional	PASSED								
	6. Functional	PASSED								
	7. Functional	FAILED- REPLACED LAMP HEAD								
	8. Functional	PASSED								
	9. Functional	PASSED								
	10. Functional	FAILED- REPLACED BATTERY								
	11. Functional	PASSED								
	12. 3-Hour Duration	PASSED								

Each month, or more frequently if a fault is identified, we recommend the installation is checked for status of L.E.D.'s. Corrective action if necessary should be taken and recorded on the above form.

Follow good practice as laid down in relevant legislation such as BS 5266.

EMERGENCY LIGHTING IS THERE TO SAVE LIVES

TO RESET AFTER A FAULT - SWITCH LUMINAIRE UNSWITCHED
MAINS OFF / ON.
SLOW RED LED FLASHING = BATTERY FAULT
PERMANENT RED LED = LAMP FAULT

CLEANING INSTRUCTIONS

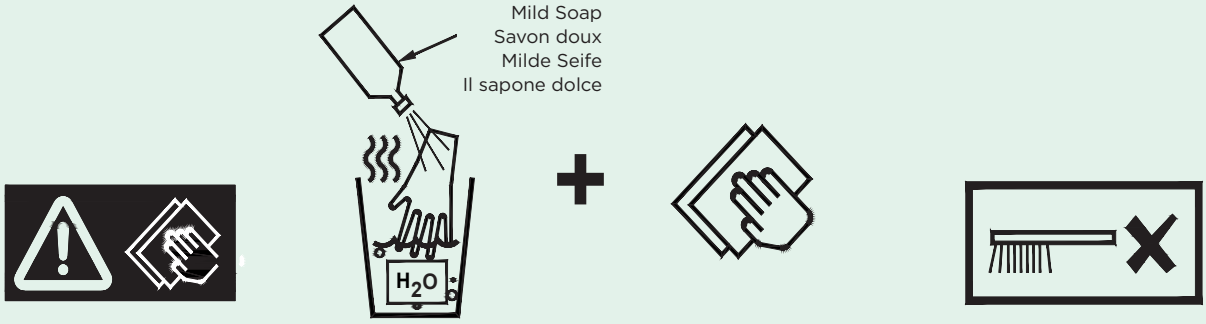

INFORMATION

Operation and Maintenance

Continual operation at mains voltages in excess of the rated voltage will reduce LED and expected gear life.

This luminaire uses plastic components in its construction and when installed in environments containing chemicals, degradation may occur.

Operation outside intended / stated parameters may cause a hazard, and in an extreme case, for example water ingress to electronic circuits, may cause a fire.

Please contact our Technical Department for advice.

Modifications

Philip Payne products should not be modified.

Any modification may render the product unsafe and will invalidate any Safety/Approval marks.

Philip Payne will not accept any responsibility for any modified products or for any damage caused as a result of their modification.

Monthly and Annual Tests

Monthly and Annual tests should be carried out in accordance with BS EN 50172:2004, 7.2.

Testing can be carried out by using a sub circuit isolator or by switching off the lighting circuit at the circuit breaker (not for AutoTest or DALI versions).

Battery pack shall be replaced if the specified 3 hour duration is not met.

For replacement battery pack contact Philip Payne Ltd.

The light source contained in this luminaire shall only be replaced by the manufacturer or his service agent or a similar qualified person.

Philip Payne Limited, Thornhill House, Thornhill Road, Solihull, B91 2HB
+44 (0)121 705 2384 | sales@philippayne.co.uk | www.philippayne.co.uk

ISO 9001 Quality Management Systems CERTIFIED FM-55077
ISO 14001 Environmental Management CERTIFIED EMS 756379
ISO 45001 Occupational Health and Safety Managment CERTIFIED OHS 756381

NOTICE TO CONTRACTOR PLEASE PASS THIS LEAFLET TO THE END-USER.