ION WALL

IP20 | NM/MM | 6 WARRANTY | KG 1.5 | 230v | 1W | DALI

EN 60598-1
EN60598-2-22
EN55015
EN61547
EN61000-3-2



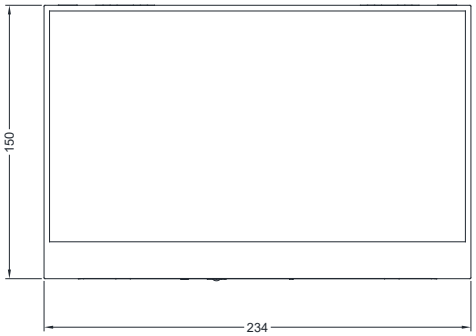

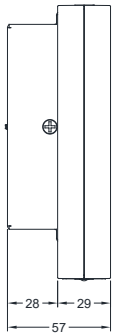

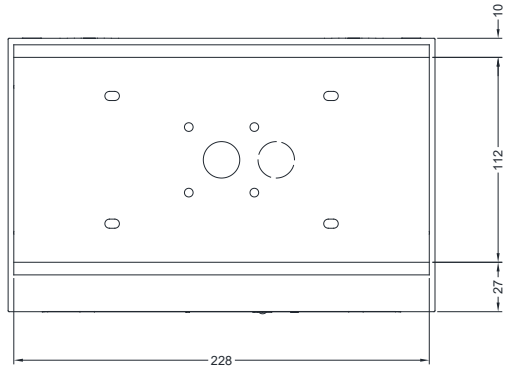



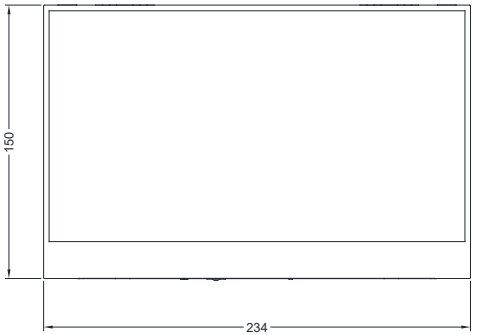

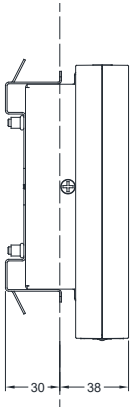

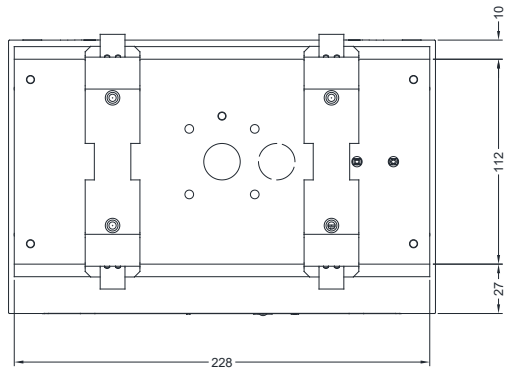

ION WALL (FLAG)

IP20

NM/MM

6 WARRANTY

KG 1.5

230v

1W

DALI

EN 60598-1

EN60598-2-22

EN55015

EN61547

EN61000-3-2





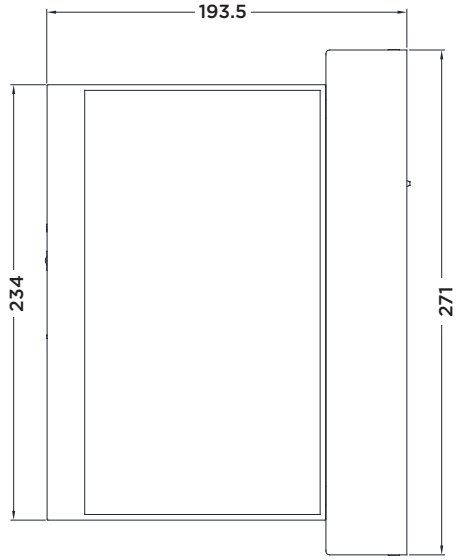

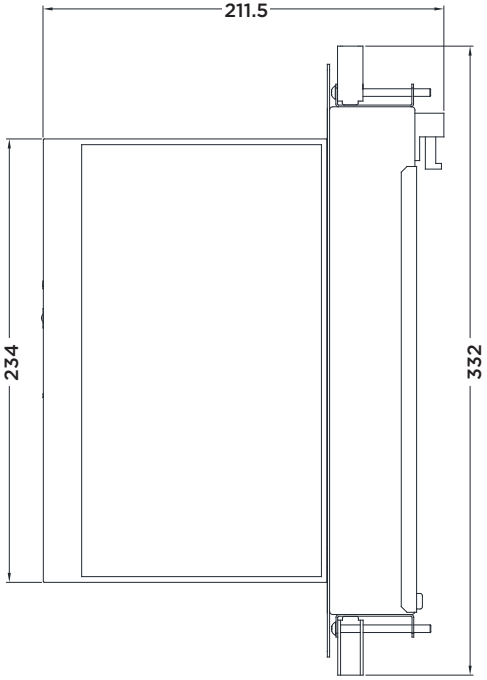

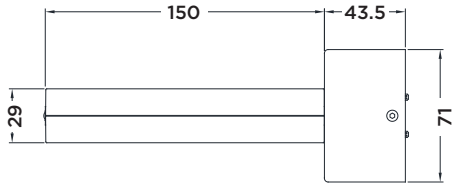

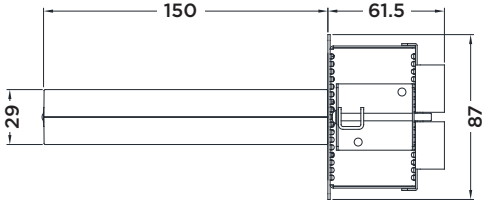

ION WALL

IP20

NM/MM

6 WARRANTY

KG 1.5

230v

1W

DALI

EN 60598-1

EN60598-2-22

EN55015

EN61547

EN61000-3-2

EXAMPLE PRODUCT CODE		ION	W	S	LM	W	IS	S	U
FAMILY	ION	ION							
TYPE	WALL	W							
	FLAG	F							
MOUNT	SURFACE	S							
	RECESSED	R							
CONTROL	MAINS/CENTRAL BATTERY*	LA							
	DALI MAINS/CENTRAL BATTERY*	DA							
	MAINTAINED SELF-CONTAINED	LM							
	MAINTAINED DALI	DL							
	MAINTAINED SPECTO-XT	XT							
COLOUR	WHITE (RAL 9016)	W							
	BLACK (RAL9005)	K							
	GREY (RAL 9006)	G							
	PENNY BRONZE	V							
LEGEND TYPE	ISO 7010	IS							
LEGEND SIDE	SINGLE SIDED	S							
	DOUBLE SIDED**	D							
ARROW DIRECTION	UP	U							
	DOWN	D							
	LEFT	L							
	RIGHT	R							

Example Code IONWSLMWISSU ION | Wall | Surface | Maintained Self-Contained | White (RAL 9016) | ISO 7010 | Single SIded | Up Arrow

For more information on colours, please go to the **Finishes Page**.

*For input voltages please refer to our installation leaflets.

**Only available on flag mounted versions